Wearable Technology to Improve the Safety of Humanitarian Workers

QUT Science and Engineering

A. Moodie, M. Senadeera & A. van der Winden | Queensland University of Technology | Faculty of Engineering

Investigating the feasibility of wearable technology integrated with a LoRa network to improve the safety of humanitarian workers in dangerous situations

Introduction and Background

The undergraduate research team from the Queensland University of Technology (QUT) worked with Engineers Without Borders Australia (EWB) to investigate the feasibility of using location-tracking technology to increase the safety of humanitarian aid workers in dangerous situations. Through working with EWB, the team were able to apply a human-centred design approach to ensure the project outcomes would consist of appropriate technology.

Each year, humanitarian aid workers are subject to unprovoked violence, sexual assault, kidnapping and murder. The nature of their work means they often live and operate in some of the most dangerous areas of the world. In addition, the demand for humanitarian workers in conflict-stricken areas is growing [1], as are the numbers of violent incidents to which they are exposed on a yearly basis [2]. In 2020, there were 276 incidents globally involving aid workers, comprising 475 victims, of which 108 were killed and 125 kidnapped [2]. This correlates to an increase of over 550% in the number of violent incidents occurring since 2000 [2].

Although it is anticipated that the designed solution could be adapted to different contexts, an initial case study was conducted to evaluate the design of the proposed solution and analyse its feasibility. The research team, therefore, took a contextual case study of the refugee camps of Cox's Bazar District, in southern Bangladesh for the project. This context was chosen due to the high numbers of humanitarian workers present, the extreme size of the refugee camps and reports of violent incidents occurring to humanitarian workers in the location. Fuelled by what the United Nations have labelled a genocide in neighbouring Myanmar [3], the Rohingya crisis saw an exodus of refugees cross the border and enter the Cox's Bazar refugee camps, swelling the camps' population to over a million at its peak [4]. These form the largest and most heavily populated refugee camps on Earth [3]. Since 2018, there have been six major incidents of violence towards humanitarian workers in Cox's Bazar District reported. These include sexual assault, physical assault, and a murder [2].

Methodology

To develop a human-centred design approach, workers with experience in the Cox's Bazar refugee camps were approached to participate in a survey to inform the preliminary system design. Survey respondents worked with a wide variety of aid organisations (including World Food Program, UN Agencies such as UNHCR, NGOs such as BRAC) and held a wide variety of positions (including Emergency Telecommunications Coordinator, Head of Site Planning, Gender and Protection Advisor). From the survey results, 38 feasibility considerations were established to assess the feasibility of the proposed system design. Through informal consultations with humanitarians with contextual experience and further research, appropriate solutions were proposed, and the feasibility of the preliminary design was assessed to be potentially acceptable.

Design Solution

System Overview

The proposed solution explores the development of wearable devices worn by humanitarian workers which wirelessly transmit alert messages to a centralised response team. When humanitarian workers are facing an immediate threat of violence, have been forcibly removed from their working area, etc., a response and rescue team will be instantly informed of their situation and have the individual's live location. Figure 1 represents the various trigger conditions and alerts that have been designed to provide appropriate support based on the situation.

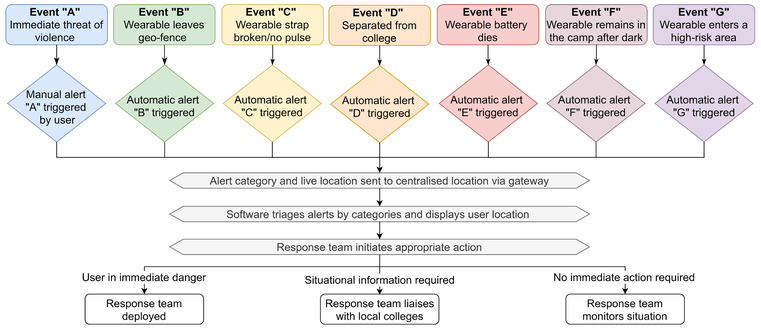

Fig. 1. System Process

Technical Solution

Considering most refugee camps globally are located in remote areas with limited access to large-scale communication infrastructure, a proprietary Low Power Wide Area Network (LPWAN) based upon Semtech Long Range (LoRa) technology has been proposed.

The base functionality of the system has been demonstrated through a proof-of-concept focused upon the ability to trigger an emergency alert which periodically transmits geo-location information. For rapid prototyping, the wearable was built upon an Arduino Uno microcontroller with a Dragino LoRa/GPS shield as well as a RAK831 Pilot Gateway used to receive and monitor the data. Figure 2 presents the overall system architecture.

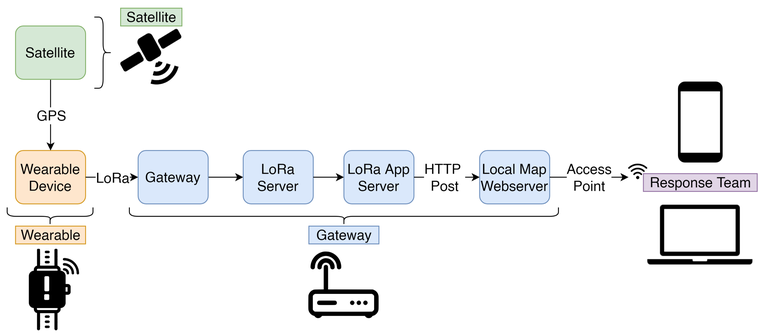

Fig. 2. System Architecture

The gateway was programmed to not only manage the LoRa server using the open-source ChirpStack platform, but also to integrate the received data with a local webserver to visualise the geo-location of the wearable on a map interface. Being completely decentralised, the network can operate without external connections to the internet as well as being able to operate in remote locations with a simple renewable power system.

An embedded circuit for the wearable was designed with a schematic (Figure 3) and PCB built around a ATSAMD21E18 micro-controller unit with a RFM95 LoRa module, Quectel L80-R GPS and PAH8001EI-2G optical heart-rate sensor integrated into a single unit. The board is powered by a rechargeable 3.7V 2200mAh LiPo battery.

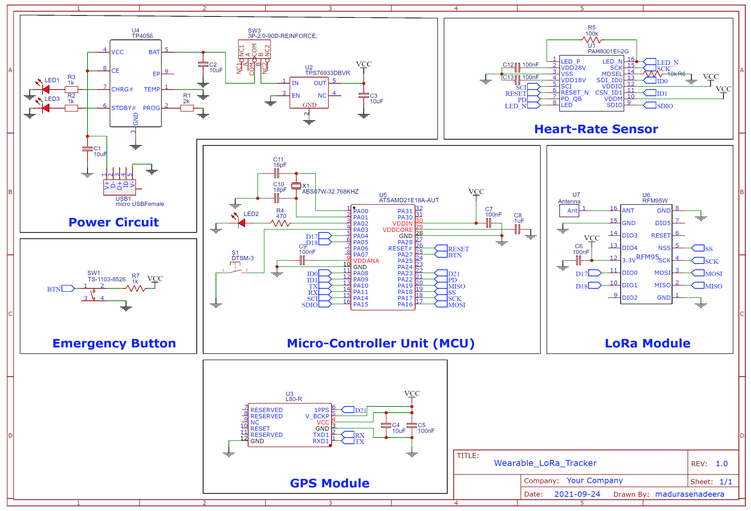

Fig. 3. Wearable Schematic

Conclusion & Future Opportunities

The investigation into the feasibility of using wearable technology to improve the safety of humanitarian aid workers found the concept design feasible. Further research into design considerations and contextual circumstances is required for a detailed design. The concept design is flexible so that there is the opportunity to extend the system to contexts other than the case study, where humanitarian workers may benefit from increased safety measures. There is also the opportunity to increase the functionality of the wearable device to include more complex features such as live location reporting when entering a 'high-risk' location and the ability to send different types of manual alerts to the response team. To create an appropriate detailed design, it would be important to work with all stakeholders which will give the opportunity to integrate the system with current safety measures (e.g., refugee camp entry and exit monitoring).

References

[1] Hoelscher, Kristian; Jason Miklian & Håvard Mokleiv Nygård "Understanding Attacks on Humanitarian Aid Workers", Conflict Trends, 6. Oslo: PRIO., 2015

[2] for Humanitarian Assistance (BHA) USAID, "Major attacks on aid workers: Summary statistics," https://aidworkersecurity.org/incidents/report, 2021.

[3] World Vision, "Rohingya refugee crisis: Facts, FAQs, and how to help" https://www.worldvision.org/refugees-news-stories/rohingya-refugees-bangladesh-facts 2021

[4] TorqAid,"Understanding Rohingya Crisis", https://www.torqaid.com/understanding-rohingya-crisis/, 2021.